Body

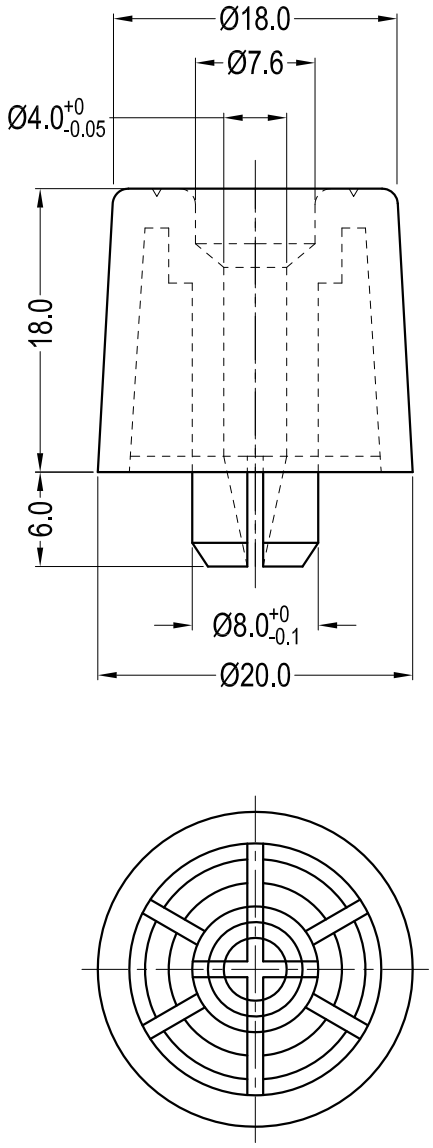

Pin

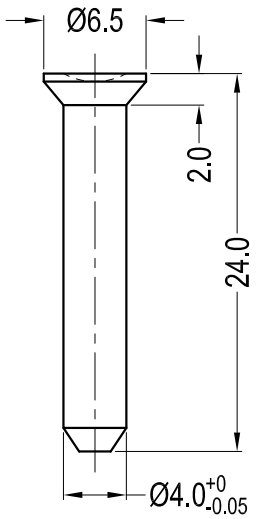

Assembly

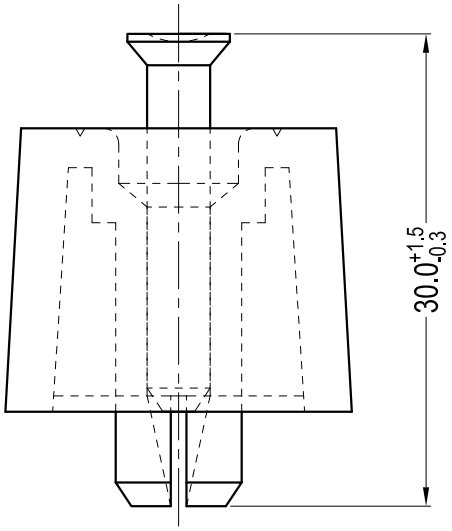

Part No.	Article No.	Material(Body)	Material(Pin)
30069	GF-126-PP	PP UL94 HB	PP UL94 HB
30070	GF-126-A4	40%TPV+60%PP UL94 HB	
30071	GF-126-M40	70%TPV+30%PP UL94 HB	

Notes:
1.Color:Black;
2.RoHS Compliant;
3.Hole:Ø8.0-8.1mm;
Panel Thickness:0.5-1.2mm.

Gecko International Co.						DATE	2021-8-12	DIMENSION	TOLERANCE
TITLE	SOFT FAST FOOT					SCALE	FIT	L≦4	±0.10
ARTICLE NO.	GF-126	MOLD NO.	S0142/56	DRAW	JF	UNIT	MM	4＜L≦15	±0.20
PART NO.	SEE TABLE	MATERIAL	SEE TABLE	DESIGN	JF	VERSION	A0	15＜L≦50	±0.30
DWG NO.	E3020	COLOR	SEE NOTES	APPROVAL	FDL	VIEW		50＜L≦100	±0.40